TCR-102

TTL-controlled 2-channel relay unit for DIN rail, built for battery-powered and remote systems.

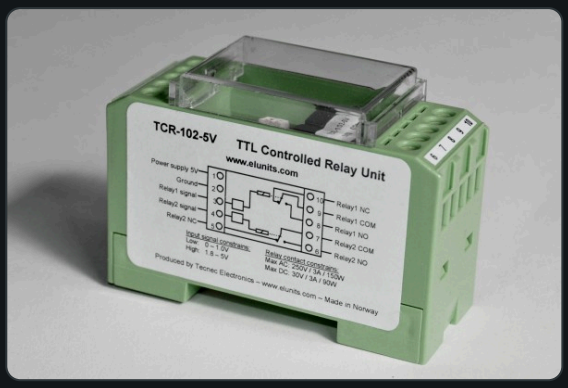

5 µA
Minimum supply current, LEDs disabled (5 V model)

≤55 µA
Input current at 5 V logic high, drive it from any GPIO

2×SPDT
250 VAC / 30 VDC, 3 A contacts

- 3.3 / 5 V TTL inputs
- 5 · 6 · 9 · 12 · 24 V supply models
- TS35 DIN rail
- Screw terminals
- Designed in Norway

Description

The TCR-102 series is a DIN-rail mountable relay unit with two SPDT relays. Each channel is switched by a 3.3 V or 5 V logic signal that draws only microamps, so a microcontroller can drive it directly from an output pin without a transistor stage.

With the status LEDs disabled, the minimum current draw of the whole unit is only a few microamps. That makes it suitable for battery- and solar-powered installations at remote locations.

Typical applications

- Switching 250 VAC and 30 VDC loads from ESP32, Arduino, Raspberry Pi or PLC outputs
- Battery- and solar-powered controllers and IoT nodes
- Remote and outdoor installations where standby power matters
- Up-time critical systems that need a robust, panel-mounted relay

Connections

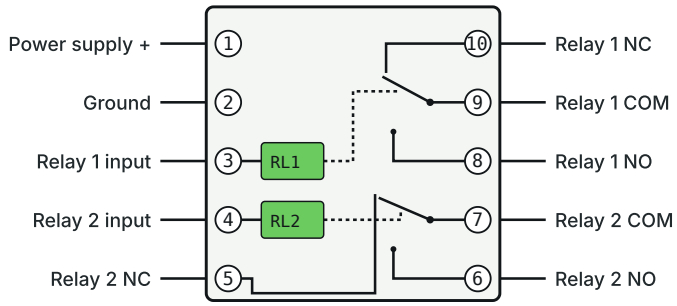

Logic: input **high** energises the relay: COM connects to **NO** and the relay LED lights. Input **low** releases it: COM connects to **NC**.

Inputs accept 3.3 V and 5 V logic (high = 1.8–5 V). The relays are powered separately through pin 1: 5, 6, 9, 12 or 24 V depending on model.

Electrical specifications

At 20 °C, nominal supply voltage and LEDs enabled unless otherwise stated.

PARAMETER	CONDITION	MIN	MAX
Input signals			
Input voltage, low		−0.3 V	1.0 V
Input voltage, high		1.8 V	5.0 V
Input current, low	1 V input	10 µA	20 µA
Input current, high	5 V input	**30 µA**	**55 µA**
Switch-on delay	Input 0 V → 5 V	5 ms	7 ms
Switch-off delay	Input 5 V → 0 V	2 ms	6 ms
Contact ratings (per relay)			
Switching voltage	AC / DC		250 VAC / 30 VDC
Switching current	AC / DC		3 A
Switching power	AC / DC		150 W / 90 W
Minimum contact load		100 mA @ 5 VDC	

Supply voltage and current consumption

MODEL	SUPPLY RANGE	LEDS ENABLED		LEDS DISABLED	
		MIN	MAX	MIN	MAX
TCR-102-5V	4 – 6 V	15 mA	220 mA	**5 µA**	160 mA
TCR-102-6V	5 – 7.5 V	15 mA	200 mA	**5 µA**	140 mA
TCR-102-9V	7.5 – 10.5 V	15 mA	150 mA	**6 µA**	90 mA
TCR-102-12V	10 – 15 V	15 mA	130 mA	**7 µA**	70 mA
TCR-102-24V	19.5 – 29 V	15 mA	100 mA	**10 µA**	40 mA

Minimum and maximum current draw during operation. Each LED draws approx. 20 mA when lit; see LED indicators on page 3.

Environmental

Operating temperature	−30 … +70 °C
Storage temperature	−30 … +85 °C
Humidity, non-condensing	20 … 85 % RH
Vibration, 10 – 55 Hz	1.5 mm double ampl.

Mechanical

Dimensions (W × H × D)	75 × 55 × 30 mm
Weight	65 – 67 g
Mounting	TS35 DIN rail
Connections	10 screw terminals

Mechanical dimensions

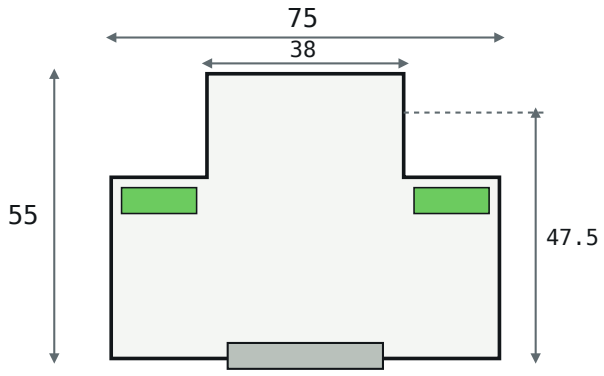

Front view

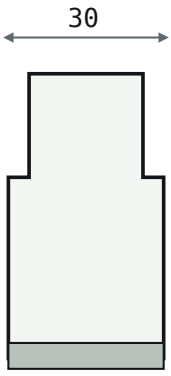

Side view

Dimensions in mm.
Mounts on TS35
(35 mm) DIN rail.

LED indicators

LED	COLOUR	ON	OFF
PWR	Green	Power on	Power off
RELAY1	Yellow	Input 1 high COM 9 → NO 8	Input 1 low COM 9 → NC 10
RELAY2	Yellow	Input 2 high COM 7 → NO 6	Input 2 low COM 7 → NC 5

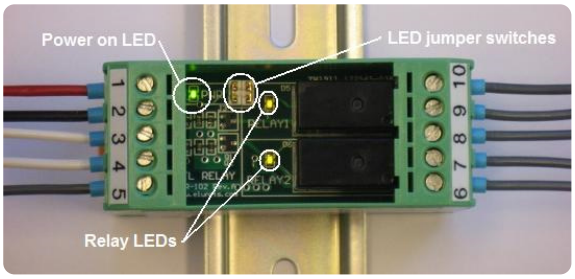

Inside view: power LED, relay LEDs and LED jumper switches.

Each LED draws approximately 20 mA when lit. For lowest consumption, open the lid and remove the jumpers: the **right** jumper disables the PWR LED, the **left** jumper disables both relay LEDs.

Relay life expectancy

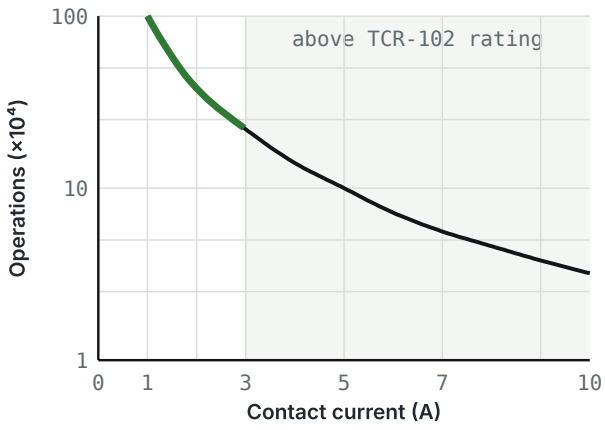

Minimum expected life from relay manufacturer data. Below 1 A, at least 1 million operations can be expected. Relays: TE Connectivity PCH series, UL, CSA and VDE approved.

Wiring example: ESP32

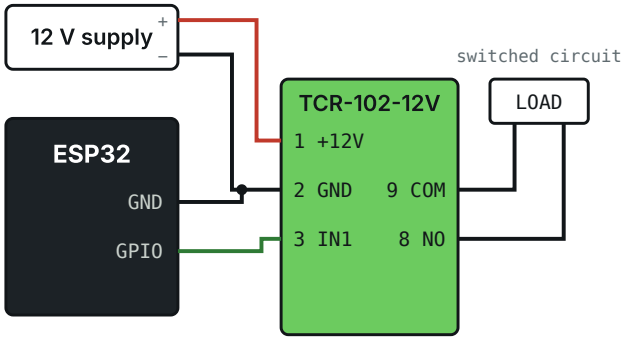

GPIO high → relay on. Common GND, no transistor stage needed.

Connect controller GND to pin 2. Any 3.3 V or 5 V output can drive pins 3 and 4 directly. Mains wiring must be done by qualified personnel.

Ordering information

ORDERING CODE	NOMINAL SUPPLY	SUPPLY RANGE	TYPICAL USE
TCR-102-5V	5 V	4 – 6 V	USB / 5 V logic systems
TCR-102-6V	6 V	5 – 7.5 V	6 V batteries
TCR-102-9V	9 V	7.5 – 10.5 V	9 V supplies
TCR-102-12V	12 V	10 – 15 V	12 V batteries, vehicles, solar
TCR-102-24V	24 V	19.5 – 29 V	Industrial 24 V control cabinets

Order online at **elunits.com**. Volume pricing and custom supply voltages on request: **post@elunits.com**

Quality control and testing

Every unit is tested before shipping for correct relay operation, current consumption and input signal current at minimum and maximum operating levels.

Regulations

- RoHS compliant
- Relays UL, CSA and VDE approved (TE Connectivity PCH series)

Producer

Tecnec Electronics
Krambugata 2
7011 Trondheim
Norway

Org. no. NO 956 203 511 MVA
post@elunits.com
elunits.com

Disclaimer

These products are not intended for life-critical applications. Specifications are subject to change without notice. Check elunits.com for the latest revision of this document.

Document history

REV.	DATE	CHANGES
A	2011-04-01	Initial release.
B	2011-06-28	Corrected specification table, added information and pictures, layout changes.
C	2012-11-17	Product and manufacturer information updated.
D	**2026-11-22**	New layout. Corrected LED/contact logic (input high: COM → NO). Corrected input high range to 1.8–5 V. Added wiring example, ordering use cases and updated producer information.